EICHER PRO 2059XP

CNG F HSD VE

Manufacturing	: 09/2020
No. Of Owners	: 1
Duplicate Keys	: N/A
KM Driven	: 1,83,889
Fuel Type	: CNG
Reg State	: Delhi
Reg City	: Delhi
Insurance Expiry	: 30/10/25
RC Availability	: Yes
Permit	: National Permit
Permits Date Validity	: 18/11/2025

VEHICLE DETAILS

Registration Number	**DL 1L A E3215**	RTO	**RAJPUR ROAD**
City	**Delhi**	RTO NOC Issued	**N/A**
Inspection At	**On-Site**	Under Hypothecation	**Yes**
Branch	**Delhi**	CNG/LPG Instalment	**Yes**
To be scrapped	**No**	Chassis Number Embossing	**Yes**
Manufacturing	**09/2020**	PUC Validity	**17/11/25**
Registration	**11/2020**	MV Tax (Upto)	**31/03/26**
Lifespan Remaining	**10 Months, 9 Years**	Fitness (Upto)	**12/12/2026**
RC Mismatch if any	**No**		

SUMMARY

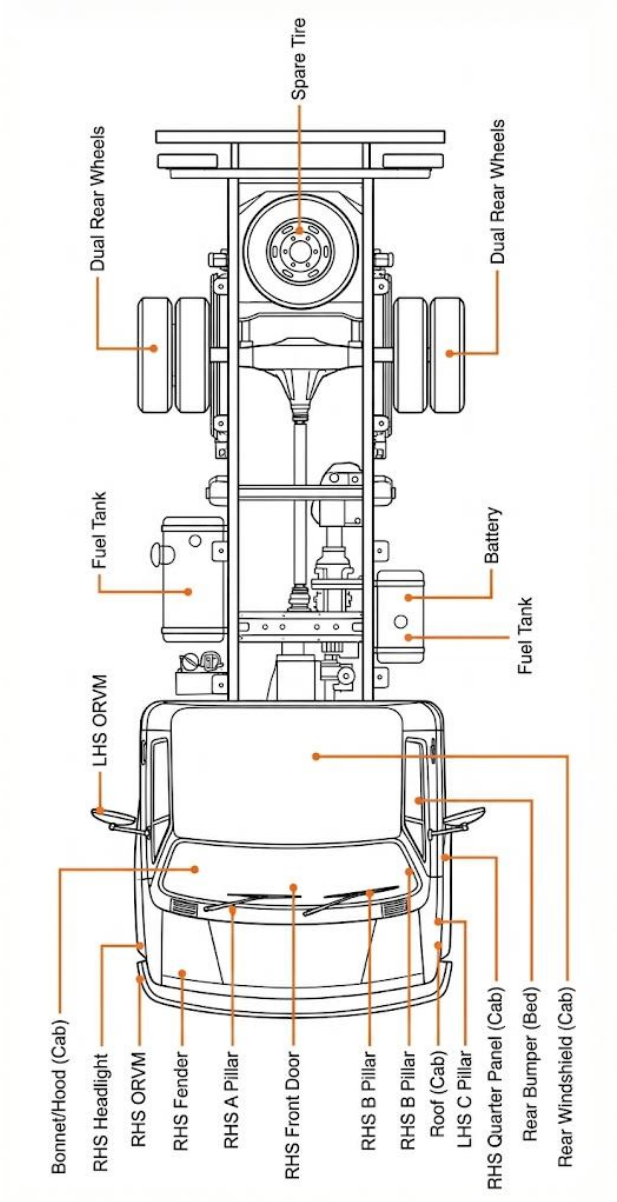

Exterior + Tyres

Part	Sub-Part	Status	Remarks / Condition
Bumper	Front / Rear	!	Front Lower Bumper Slightly Dislocated
Cabin Panels	LHS / RHS	✓	
Bonnet / Hood	—	✓	

Roof (Cab)	—	✓	
Fender	LHS / RHS	✓	
Doors	LHS / RHS	✓	
Windshield	Front / Rear	✓	
Pillars	A / B / C	✓	
Load Body Floor	—	✓	
Side Panels	—	✓	
Tailgate	—	✓	
Chassis Visible Area	—	✓	
Tyre	1	!	30-40%
Tyre	2	!	20-30%
Tyre	3	✓	60-70%
Tyre	4	!	40-50%
Tyre	5	-	
Tyre	6	-	
Tyre	Spare	!	10-20%
Wheels / Rims	—	✓	

Electricals + Interior

Part	Sub-Part	Status	Remarks / Condition
Battery	—	✓	
Wiring Harness	—	✓	
Headlights	LHS / RHS	✓	
Tail Lamps	LHS / RHS	✓	
Indicators	—	✓	
Horn	—	✓	
Instrument Cluster	—	✓	
Warning Lights	—	✓	
Dashboard	—	✓	
Seats	Driver / Co-driver	✓	
Seat Belts	—	✓	
Cabin Fan / Blower	—	✓	
Wipers	—	✓	

Engine + Transmission

Part	Sub-Part	Status	Remarks / Condition
Cold Start	—	✓	

Idling	—	✓	
Blow-by	Dipstick Test	✓	
Exhaust Smoke	—	✓	
Engine Oil	—	✓	
Coolant	—	✓	
Oil Leakage	—	✓	
Fuel Injection	—	✓	
Turbocharger	—	✓	
Clutch	—	✓	
Gear Shifting	—	✓	
Gearbox Noise	—	✓	
Propeller Shaft	—	✓	
Differential	—	✓	

Steering / Suspension + Brakes

Part	Sub-Part	Status	Remarks / Condition
Steering Free Play	—	✓	
Steering Box	—	✓	
Kingpin / Ball Joint	—	✓	

Leaf Springs	—	✓	
U-Bolts & Clamps	—	✓	
Shock Absorbers	—	✓	
Front Axle	—	✓	
Brake Pedal Feel	—	✓	
Brake Pull	—	✓	
Brake Lines	—	✓	
Parking Brake	—	✓	

Vehicle Photo Documentation Sheet

PROFILE	PHOTOGRAPH
1	
2	

3	
4	

5	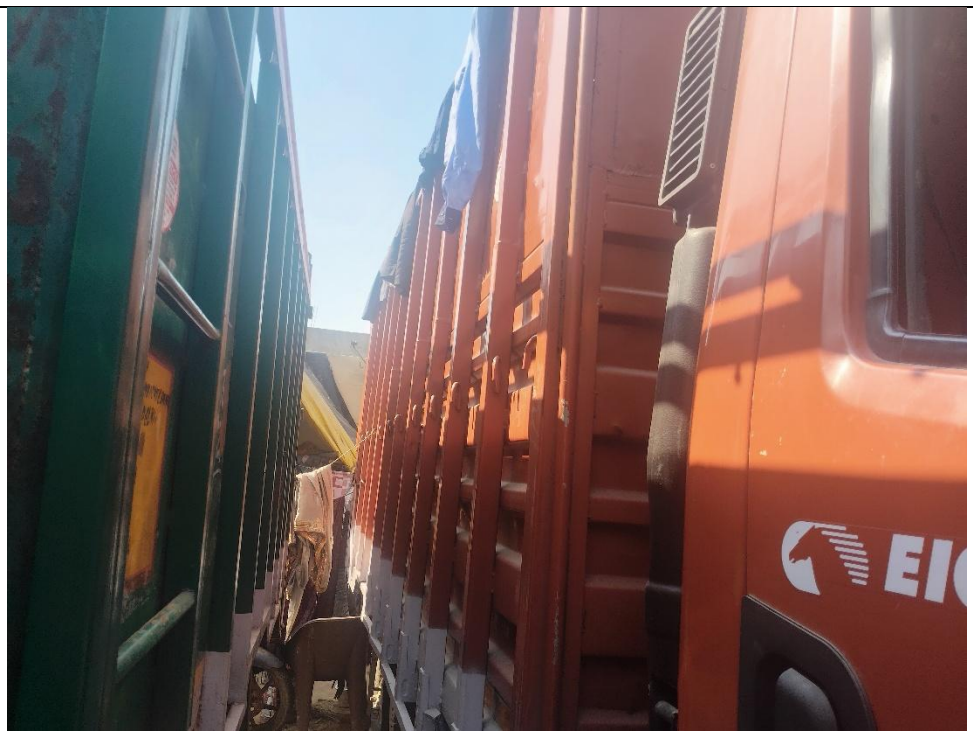
6	

7	
8	

9	
10	

TYRE 1	
TYRE 2	

TYRE 3	
TYRE 4	

TYRES	